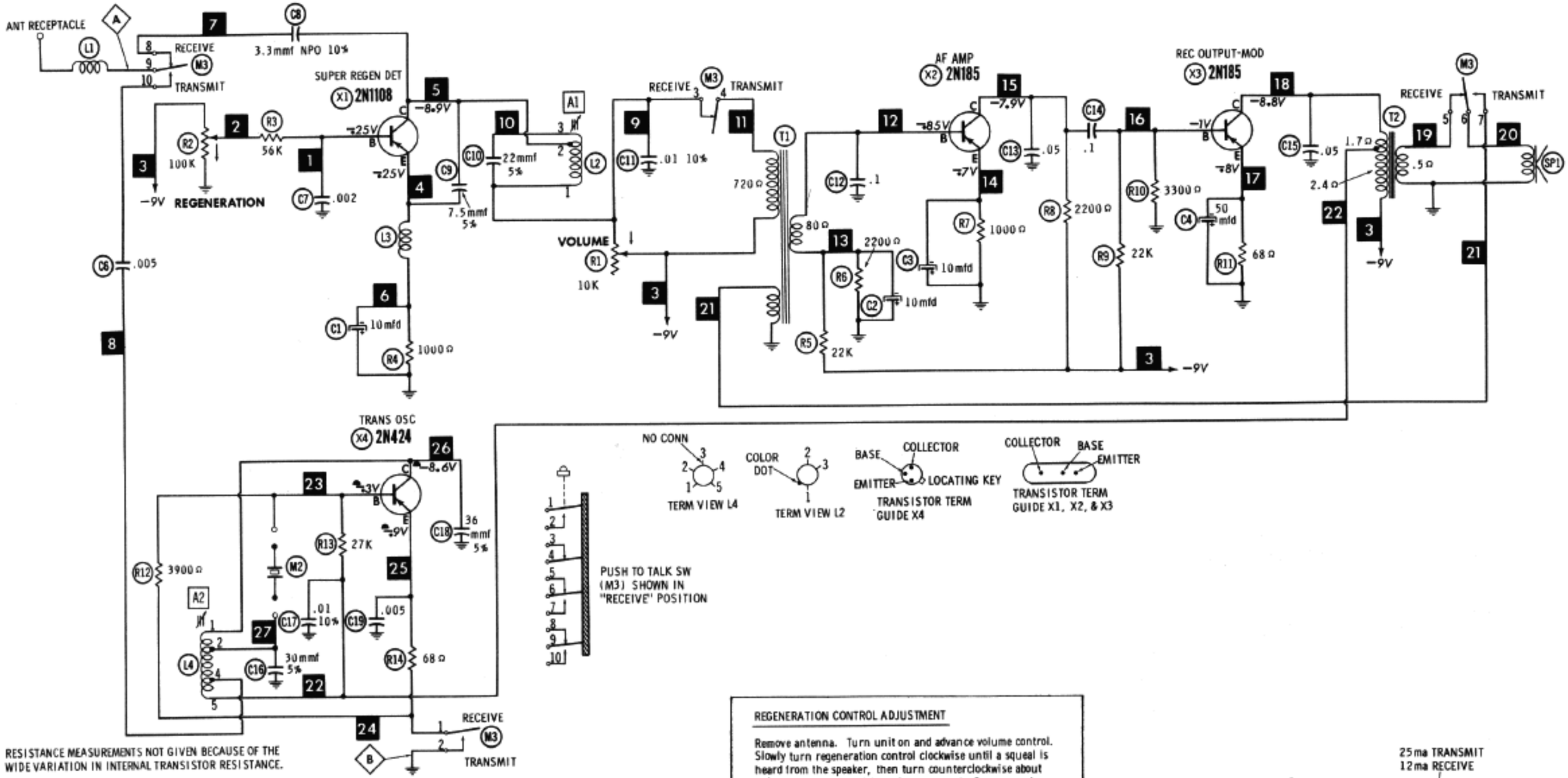

RESISTANCE MEASUREMENTS NOT GIVEN BECAUSE OF THE WIDE VARIATION IN INTERNAL TRANSISTOR RESISTANCE.

NUMBERS ASSIGNED TO COILS, SWITCHES, PLUGS, SOCKETS, AND TRANSFORMERS ARE TO FACILITATE CIRCUIT TRACING OR COMPONENT REPLACEMENT AND MAY NOT NECESSARILY BE FOUND ON THE UNIT.

1. DC voltage measurements taken with vacuum tube voltmeter.
2. Socket connections or transistor terminals are shown as bottom views.
3. Measured values are from socket pin or terminal to common ground.
4. Nominal tolerance on component values makes possible a variation of ±15% in voltage and resistance readings.
5. Volume control at maximum, no signal applied for voltage measurements.

A PHOTOFACT STANDARD NOTATION SCHEMATIC
with CIRCUITRACE

©Howard W. Sams & Co., Inc. 1961

REGENERATION CONTROL ADJUSTMENT

Remove antenna. Turn unit on and advance volume control. Slowly turn regeneration control clockwise until a squeal is heard from the speaker, then turn counterclockwise about 1/4 turn until squeal is no longer heard. Depress and release transmit button. A hiss should be heard. If not, slowly turn regeneration control clockwise until a hiss is heard each time the transmit button is released.

RECEIVER ALIGNMENT

Insert antenna. Adjust A1 for best reception from a transmitter placed far enough away to produce a weak signal.

TRANSMITTER ALIGNMENT

Remove antenna and connect a lamp bulb from point A to point B. Depress transmit button and adjust A2 for maximum bulb brilliance. The bulb should glow each time the button is depressed. If not, adjust A2 slowly clockwise until the bulb does glow each time.
NOTE: The glow of the bulb will be dim because of the low RF output.

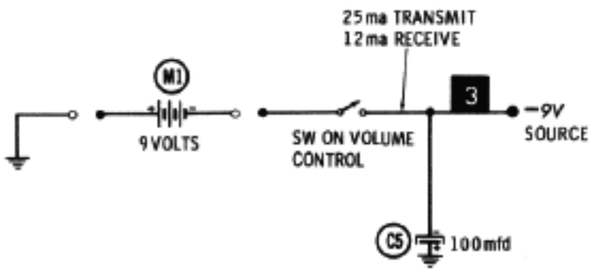

HEATH MODEL GWW-30